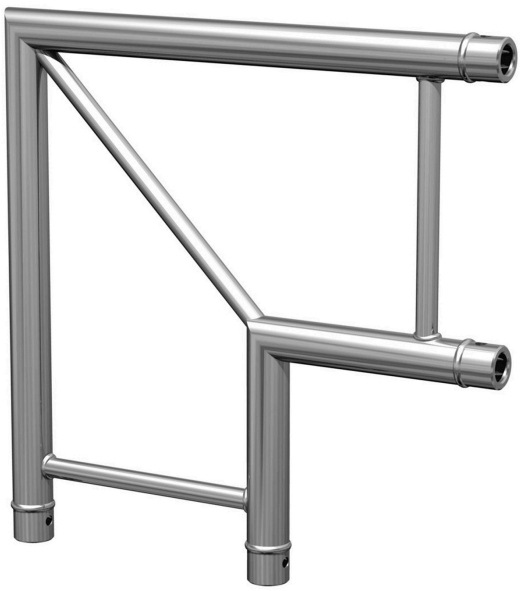

AGDUO29-02

SKU: H10042

Scale angle
2 directions 90° flat
Supplied with sleeves